MAtchUP

D3.8: New services on sustainable mobility in Dresden – First Version

WP 3, T 3.5

Date of the document: 30.09.2019

September, 2019, (M24)

Authors: Dr. Michael Anz, Axel Wittkuhn

MAtchUP - SCC-1-2016-2017

Innovation Action – GRANT AGREEMENT No. 774477

This project has received funding from the European Union's Horizon 2020 research and innovation programme under Grant Agreement N°774477

Technical References

Project Acronym	**MAtchUP**
Project Title	MAximizing the UPscaling and replication potential of high-level urban transformation strategies - MAtchUP
Project Coordinator	Ernesto Faubel Ayuntamiento de Valencia efaubel@valencia.es
Project Duration	1 October 2017 – 30 September 2022 (60 Months)

Deliverable No.	D3.8
Dissemination Level	Public
Work Package	WP 3 – Demonstration in Dresden
Task	T 3.5 – Sustainable Mobility
Lead beneficiary	8 (DRE)
Contributing beneficiary(ies)	9 (DWG), 10 (DVB), 12 (FHG)
Due date of deliverable	30.09.2019
Actual submission date	25.09.2019
Estimated person-month for deliverable	10 PM for the 1st version in M24 10 PM for the final version in M36

This project has received funding from the European Union's Horizon 2020 research and innovation programme under Grant Agreement N°774477

Version	Person	Partner	Date
0.1	Michael Anz, Axel Wittkuhn	DRE	06 September 2019
1.0	Axel Wittkuhn	DRE	20 September 2019

Disclaimer

The information reflects only the author's view and the Commission is not responsible for any use that may be made of the information it contains.

This project has received funding from the European Union's Horizon 2020 research and innovation programme under Grant Agreement N°774477

Table of Content

This project has received funding from the European Union's Horizon 2020 research and innovation programme under Grant Agreement N°774477

This project has received funding from the European Union's Horizon 2020 research and innovation programme under Grant Agreement N°774477

This project has received funding from the European Union's Horizon 2020 research and innovation programme under Grant Agreement N°774477

This project has received funding from the European Union's Horizon 2020 research and innovation programme under Grant Agreement N°774477

List of Tables

This project has received funding from the European Union’s Horizon 2020 research and innovation programme under Grant Agreement N°774477

List of Figures

This project has received funding from the European Union's Horizon 2020 research and innovation programme under Grant Agreement N°774477

Abbreviations and Acronyms

Acronym	Description
GCPD	Green City Plan of Dresden
CLS	Controllable local system
ICT	Information and communications technology
FNN	Forum Network Technology/Network Operation
HAN	Home area network
HKS	Type of Power Charger Voltage Stabilizer
LHD	City of Dresden (in German: Landeshauptstadt Dresden)
LMN	Local meteorological network
OCCP	Open Charge Point Protocol
RFID	Radio Frequency Identification
RSU	Road Side Units
SMGW	Transaction in Gateway Monitor
STB	Surface Transportation Board
SrV	German system of representative traffic surveys (in German: System repräsentativer Verkehrsbefragungen)
SUMP	Sustainable Urban Mobility Plan 2025plus
WAN	Wide area network

This project has received funding from the European Union's Horizon 2020 research and innovation programme under Grant Agreement N°774477

Abstract

This report constitutes Deliverable “D3.8: New services on sustainable mobility in Dresden – 1st version”, which is one of the main outcomes of Task “T3.5: Sustainable mobility”. The final version of this report (i.e. D3.20) will be delivered in September 2020 (project month M36).

All interventions revolve around on innovative mobility solutions and measures defined in Dresden to boost the e-mobility in the city. The focus lies on a new operating concept of intermodal mobility and on a mobility planning application oriented to regular public transport users.

The report is divided into three main parts. Chapter 3 gives a detailed technical definition of each intervention, followed by chapter 4 giving an executive project description of each action containing

- the management structure,
- the technical specification,
- health, safety and waste management requirements,
- as well as risks considered ex-ante and proposed risk-mitigation measures.

Last but not least, chapter 5 describes the status of each intervention containing

- risks found and corrective actions performed,
- business model and financial scheme applied,
- citizen engagement strategy implemented,
- next steps.

This project has received funding from the European Union’s Horizon 2020 research and innovation programme under Grant Agreement N°774477

1 Introduction

1.1 Purpose and target group

This report constitutes Deliverable *"D3.8: New services on sustainable mobility in Dresden – 1st version"*, which is one the main outcomes of Task *"T3.5: Sustainable mobility"* with the Subtask *"ST3.5.2: New services on sustainable mobility"*. The final version of this report (i.e. D3.20) will be delivered in September 2020 (project month M36).

One of the core objectives of this document is to describe the detailed design of the interventions in regard to innovative mobility solutions and measures defined in Dresden to boost the e-mobility in the city.

Moreover, the project should serve as a demonstration of the usage of sustainable technologies, the development of new business strategies and as a support of urban transformation.

1.2 Contribution of partners

Table 1 depicts the main contributions from MAtchUP partners in the development of this deliverable.

Table 1: Contribution of Partners

Participant	Contributions
DRE	DRE is one of the lighthouse cities of the project and work package leader of WP3. Concerning Task T3.5, Subtask ST3.5.2 and Deliverable D3.8, DRE is the task and deliverable responsible party. Furthermore DRE is responsible for the topics urban mobility assistance (Action 25) and citizen's feedback mobility application (Action 65).
FHG	FHG is an ICT expert of the local team and thus involved in the monitoring activities and the Urban Platform developments in Dresden within WP3. It is also responsible for mobility actions in regard to electric vehicles, charging stations and new services on sustainable mobility. Concerning Task T3.5, Subtask ST3.5.2 and Deliverable D3.8, FHG is responsible for the topics optimal use of charging infrastructure (Action 23) and mobility notification (Action 27).
DWG	DWG is a main actor in the energy actions carried out in Dresden within WP3. It is also responsible for mobility actions in regard to electric vehicles, charging stations and new services on sustainable mobility. Concerning Task T3.5, Subtask ST3.5.2 and Deliverable D3.8, DWG is responsible for the topics smart management of electromobility (Action 24) and smart meter gateway for electromobility (Action 67).
DVB	DVB is a main actor in the mobility actions carried out in Dresden within WP3. Concerning Task T3.5, Subtask ST3.5.2 and Deliverable D3.8, DVB is responsible for the topics intermodal mobility hub (Action 26) and mobility planning application (Action 66).

This project has received funding from the European Union's Horizon 2020 research and innovation programme under Grant Agreement N°774477

1.3 Relation to other activities in the project

Table 2 depicts the main relationship of this deliverable to other activities (or deliverables) developed within MAtchUP and that should be considered along with this document for further understanding of its contents.

Table 2: Relation to other activities in the project

Deliverable	Relation to D3.8
D3.14	D3.14 describes the detailed design of the interventions to be implemented in the city of Dresden and is the basis for all further tasks and deliverables in WP3. Therefore, D3.14 is the basis for all further tasks and deliverables in WP3.
D3.7	D3.7 is the outcome of WP3 task 3.5.1 and describes the electrical vehicles and charging stations roll-out in Dresden. Therefore, D3.7 and D3.8 together provide a complete overview on mobility interventions.
D5.x	The objective of WP5 “Technical, social and economic evaluation” is to setup a strong evaluation framework to be deployed in each lighthouse city with the aim to assess the effectiveness of the proposed intervention, deployed in the associated individual actions. Therefore, D3.8 is linked to WP5 deliverables.
D6.x	The objective of WP6 “Exploitation and market deployment – innovative business models” is to design innovative business models and financial mechanisms to foster the implementation of smart city solutions, to identify exploitable results and to design an ad hoc strategy for their deployment and replication. Therefore, D3.8 is linked to WP6 deliverables.

This project has received funding from the European Union’s Horizon 2020 research and innovation programme under Grant Agreement N°774477

2 State of the art and future vision related to new services on sustainable mobility in Dresden

In its **Sustainable Urban Mobility Plan (SUMP) 2025plus**[1], the city of Dresden has in its possession a transport development framework adopted by the City Council (in November 2014) for the first time since 1994.

Transport planning itself has a long history in Dresden. The SUMP 2025plus follows in the footsteps of a series of significant predecessors, such as the general transport plans of 1950, 1967 and 1977, and the 1991 Guidelines for Future Transport Policy in the Dresden Conurbation. The first comprehensive transport concept following German reunification in 1994 and the 2006 Dresden Mobility Strategy built upon many years of planning.

If planning work up to the 1990s focused primarily on adapting the road infrastructure to increasing motorization and rising motor vehicle traffic volumes, the 2006 Mobility Strategy lays down very different guidelines. It reflects the change in transport policy goals: in order to enable citizens to take part in communal life, mobility must be ensured for everyone, while at the same time reducing the adverse effects of traffic such as noise, airborne pollutants and environmentally harmful emissions.

These issues appear to be contradictory. The key to developing a mobility and transport system that takes both of these aspects into account will from now on be to use existing infrastructure more effectively and place more emphasis on promoting more sustainable means of transport, such as local public transport and non-motorized traffic (walking/cycling).

On the way to a politically adopted SUMP 2025plus, Dresden passed all steps of the SUMP process as recommend in the European SUMP guidelines and in the national recommendations. The integrated planning process was realised with broad participation of various stakeholders, institutional local and regional partners, politicians, scientists and citizens. Dresden realized all steps of the SUMP cycle successfully and gained a lot of experiences in managing this planning process and running through it, in methodological know-how and expert knowledge as well as experiences in participation and planning culture.

The SUMP 2025plus makes specific statements and recommendations on the different modes, means and sectors of transport, and comments on their future development and interlinking. Increasing importance is attached to integrated settlement and mobility development, climate protection, alternative energy sources, mobility management and the financial viability of transport infrastructure.

An evaluation of the SUMP 2025plus will take place every three years and was done for the first time in 2017. The second evaluation is scheduled for 2020 incorporating the results of the current survey of mobility behaviour – the German System of

[1] Sustainable Urban Mobility Plan 2025plus – An overview, Published by: City of Dresden – Urban Development Division of City Planning Office, English version June 2016, Available at: https://www.dresden.de/media/pdf/stadtplanung/verkehr/VEP_2025plus_-_Ein_Ueberblick_EN.pdf

This project has received funding from the European Union's Horizon 2020 research and innovation programme under Grant Agreement N°774477

Representative Traffic Surveys (SrV) 2018. This survey is conducted by Dresden University of Technology in many German cities at five-year intervals.

The second evaluation of the SUMP in 2020 will also mark the start of the update to SUMP 2025plus. It is already obvious today that this will be necessary given the dynamic changes on the latest technological and social developments and their effects on urban transport and traffic.

Figure 1: Dresden SUMP 2025plus and Green City Plan

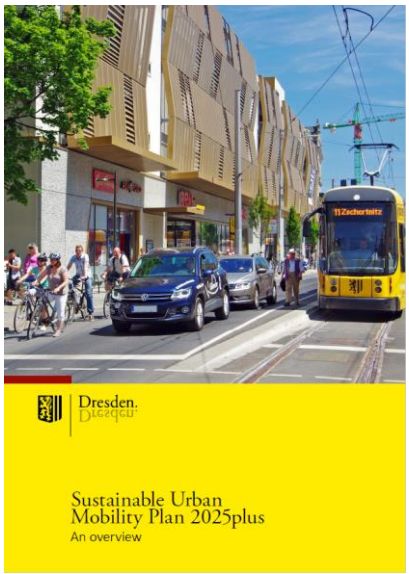

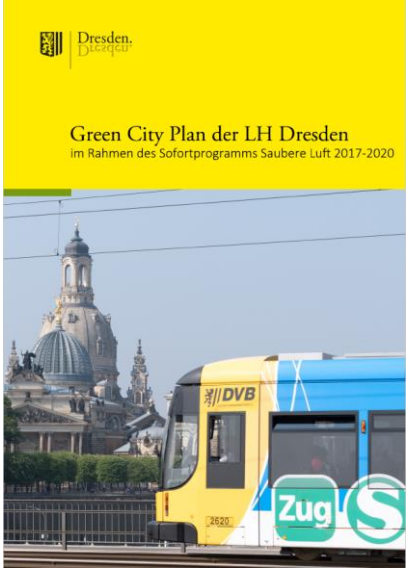

As in many conurbations in Germany, the limit values for air pollutants to protect human health have been exceeded in recent years in Dresden. With the Federal Government's "Immediate Action Programme for Clean Air 2017-2020"[2] it is now possible to intensify already ongoing efforts to improve the environmental situation in the growing city of Dresden. **The Green City Plan of Dresden[3] (GCPD)** was developed for this purpose. It builds on the existing plans in the areas of air pollution control, mobility and climate protection and develops them further. The GCPD contains ten focal points with 17 individual measures, which were evaluated in regard to effectiveness, costs and feasibility.

Dresden participates in three smart city projects under the umbrella of the "Clean Air 2017-2020" programme as shown in the following table.

[2] The Objective of the programme is to achieve a rapid and sustainable improvement in air quality in municipalities where the annual average air quality limit value for nitrogen dioxide is exceeded. The program has a budget of EUR 1.5 billion. (German website: https://www.bundesregierung.de/breg-de/themen/saubere-luft)

[3] Green City Plan der LH Dresden – im Rahmen des Sofortprogramms Saubere Luft 2017-2020, published by City of Dresden – Urban Development Division of City Planning Office, German version 2018, Available at: https://www.dresden.de/media/pdf/stadtplanung/verkehr/GCP_Dresden.pdf

This project has received funding from the European Union's Horizon 2020 research and innovation programme under Grant Agreement N°774477

Table 3: Smart city projects with Dresden participation within the "Clean Air 2017-2020" programme

Daten Tanken[4] © Fraunhofer IVI	The aim is the development of an efficient and network-compatible public charging infrastructure for electric vehicles as well as its economically viable operation through the development of data-based services.
Cities in Charge © RWTH Aachen	*"The overall aim of the consortium is the building of charging infrastructure (CIS) in German metropolitan areas and their surrounding areas. […] By making these regions more attractive for electric vehicles in terms of accessibility of CIS, the number of these vehicles should be increased, which achieves a contribution to the NO_x-reduction. […] More specifically, it is planned to build publicly accessible CIS on the Telekom properties within these cities and align the connection to the surrounding areas."*[5]
Laden am Arbeitsplatz[6] © Fraunhofer IAO	The aim is the development of charging infrastructure for electric vehicles on Fraunhofer properties, which can be used by employees, fleets of company cars and third parties.

The above mentioned SUMP 2025plus, the GCPD and the "Clean Air 2017-2020" projects are all part of the "Smart City" agenda of Dresden.

With one focus on the definition of innovative solutions and measures to boost the e-mobility in the city of Dresden, **MAtchUP** is an additional module to implement specific measures in order **to shape the future vision of Dresden as a smart and innovative city as basis for a sustainable way of living**.

Focusing on sustainable mobility services, the following MAtchUP actions are key components of this deliverable D3.8:

- Action 23 – Optimal use of charging infrastructure
- Action 24 – Smart management for electromobility

[4] For more information see German website: https://www.dresden.de/de/wirtschaft/wirtschaftsstandort/projekte-kooperationen/smartcity/datentanken.php

[5] http://www.isb.rwth-aachen.de/cms/ISB/Forschung/Projekte/~rexp/Cities-in-Charge/?lidx=1

[6] For more information see German website: https://www.lama.zone/

This project has received funding from the European Union's Horizon 2020 research and innovation programme under Grant Agreement N°774477

- Action 25 – Urban mobility assistance
- Action 26 – 1 intermodal mobility hub
- Action 27 – Mobility notification
- Action 64 – Charging station and battery storage platform
- Action 65 – Citizen's feedback mobility application
- Action 66 – Mobility planning application
- Action 67 – Smart meter gateway for electromobility

The implementation of the aforementioned actions contributes to the achievement of the objective to strengthen the mobility services for citizens in the environmental alliance.

This project has received funding from the European Union's Horizon 2020 research and innovation programme under Grant Agreement N°774477

3 Technical definition of the interventions

3.1 Action 23: Optimal use of charging infrastructure

The allocation and control of loading operations will be done depending on several factors and stakeholder interests allowing new business models (Action 37) due to more flexibility in terms of more favorable tariffs related to charging time and duration. The optimal balance between the needs of the district and the individual users are crucial for an efficient use of the charging infrastructures. To ensure the balance, two actions will be done in this line inside the MAtchUP project (new services on top of the Urban Platform):

- To predict the charge request of the EVs
- Allowing users to book charging point according to tariff benefits

Charging fleets of electric vehicles may result in load peaks during evening main charging time. If the actual energy consumption (in terms of Stat of Charge) does not correspond to the original planned driving requirement (in the sense of positive or negative deviation), there might by unwanted effects for energy resource allocation. An innovative prediction system based on telemetry will provide a much more accurate load forecast for the expected electric load and is inherent part of the input-output energy broker of the district storage system (Action 18). High invest barrier will be lowered by more exact demand forecasts and a more precise charge requests will play a crucial role for an economic operation of a district storage system. The technical installation of the predictive charge request system will be based in telemetry units installed in the monitored EVs, data receiver, raw data management and load predictor algorithm that will be connected to the district storage system.

As the charging infrastructure is going to be partly supplied by the stationary quarterly storage (Action 18) and this store is dynamically used by several producers and consumers, if all users of the neighborhood want to load their vehicles in the same period a costly and unprofitable grid connections could be dispensed with by the energy suppliers. To optimize the use of the energy storage through the EVs charges, the loading columns should be reserved in advance and then paid for via a billing system (Action 37).

To implement this booking, the planned planning system represents a mediating role between the user and the charging infrastructure and, in addition, the district storage. Via a booking or reservation interface through the Urban Platform, a user can reserve the loading infrastructure in a coarser period; the planning system accepts the reservation and calculates an optimal allocation plan. All reservations and assigns the user a specific time slot, a concrete loading column and a loading time. The loading plan is synchronized with the control system of the loading infrastructure and the district storage, so that the loading process can be controlled on the infrastructure side according to the booking. The charging process is priced according to the preferences chosen by the user (time, duration, electricity mix) via a dynamic tariff. Via an online interface, the booking is transmitted through the urban platform to the operator.

This project has received funding from the European Union's Horizon 2020 research and innovation programme under Grant Agreement N°774477

3.2 Action 24: Smart management for electromobility

A broad market penetration of the electromobility in Dresden requires a demand-oriented charging infrastructure with easy access and billing systems for the users as well as integration into local energy systems and networks. This requires an integration of electromobility into smart grid, uniform data security and data protection concepts as well as uniform operating standards (including registration and payment procedures) for charging infrastructure. Likewise, automated energy management processes are necessary for the handling of energy supplies as well as for the use of system services (balancing groups, markets).

The combination of the Smart Metering of this charging infrastructure (Action 11) with the Smart Meter Gateway (Action 67) will enable this new Smart Management and will provide:

- Cost advantages through load and energy management, market and system service of electric vehicles as flexibility, comfortable use of electric vehicles.
- Needs-based further development / adaptation of necessary components (eg access and billing system "electricity ticket") and background processes.

In addition to the need to provide user-friendly access and billing systems, there is the possibility of continuous load and energy management at the local user level. The intelligence of the systems makes it possible to increase the self-consumption of generating facilities. At the power supply and network operators level, market and system performance are managed through the control of the electric vehicles as flexibility via Smart Meter Gateway. The vehicle user benefits from simple operation, high vehicle availability, special tariffs and additional services. Offers for vehicles or tenants can be depicted on this electromobility management.

3.3 Action 25: Urban mobility assistance

A new 3rd party mobility application for road users called UMA will be extended with special services in region of Dresden. VAMOS and the UMA-App will support 3 services for parcel service companies, daily commuters, tourist & residents: Ride-sharing, Intelligent Routing and Parking. The services of the UMA app are already available, but in combination with real time traffic data from VAMOS this app will be able to enhance these. The combined system will avoid traffic jams long before congestions are likely to occur and will decrease the amount of cars with all side effects like parking spaces, pollutions & noises.

3.4 Action 26: 1 intermodal mobility hub

<u>1st amendment version</u>

A network of intermodal mobility hubs connecting public transport, car sharing and bike sharing and public charging infrastructure will be established for enhancing the use of shared mobility and electric cars. The establishment of mobility hub is required for an easier access to the sharing products. Therefore, innovative solutions have to be developed that simplify the access and payment of the offers and enable a seamless "shared mobility" of public transport, bike sharing, car sharing and electric charging. As intermodal services are offered by various operators with different access conditions,

This project has received funding from the European Union's Horizon 2020 research and innovation programme under Grant Agreement N°774477

many access difficulties for intermodal users may occur. These difficulties shall be reduced by the development of an integrated access application for booking and billing for all services together. A corporate design of the mobility hub will make it easier to identify the mobility hub and the services and to show the very important combination between the digital access via the multimodal app and the local services. MAtchUP will simulate various conceivable operating concepts from user and operator views. User needs and expectations for the mobility hub and the intermodal app will be discussed and analyzed for a customer friendly concept. Both cost and modal effects will be evaluated and further optimized to attract new users. Construction planning and design-studies will be made for 5 specific locations in Dresden-Johannstadt: Straßburger Platz, Fetscherplatz, Bönischplatz, Güntzplatz and Blasewitzer/Fetscherstraße. Based on those results, 1 Intermodal mobility hub will be selected and implemented within the MAtchUP project.

2nd amendment version

A network of intermodal mobility hubs connecting public transport, car sharing and bike sharing and public charging infrastructure will be established for enhancing the use of shared mobility and electric cars. The establishment of mobility hub is required for an easier access to the sharing products. Therefore, innovative solutions have to be developed that simplify the access and payment of the offers and enable a seamless "shared mobility" of public transport, bike sharing, car sharing and electric charging. As intermodal services are offered by various operators with different access conditions, many access difficulties for intermodal users may occur. These difficulties shall be reduced by the development of an integrated access application for booking and billing for all services together. A corporate design of the mobility hub will make it easier to identify the mobility hub and the services and to show the very important combination between the digital access via the multimodal app and the local services. User needs and expectations for the mobility hub and the intermodal app will be discussed and analyzed for a customer friendly concept. Both cost and modal effects will be evaluated and further optimized to attract new users. Construction planning and design-studies will be made for 5 specific locations in Dresden-Johannstadt: Straßburger Platz, Fetscherplatz, Bönischplatz, Güntzplatz and Blasewitzer/Fetscherstraße. Based on those results, 1 Intermodal mobility hub will be selected and implemented within the MAtchUP project.

3.5 Action 27: Mobility notification

There is an existing mobility planning application for Dresden designed for irregular users who want to compare alternative offers for a particular requirement. A new service will be implemented in Dresden Urban platform to monitor regular journeys (especially the way of work) over various traffic modes in order to target regular users (Action 66). The app to be developed will be implemented with the intermodal monitoring of a start-to-goal relation. In case of disturbances of the traffic situation a push notification will be triggered, so car driver can be warned of a traffic jam in the city center or a long parking search. The App will then propose alternative public transport routes to make a better use of the traffic network from a global management perspective.

This project has received funding from the European Union's Horizon 2020 research and innovation programme under Grant Agreement N°774477

3.6 Action 64: Charging stations and battery storage platform

Grid bottlenecks that will become a challenge in urban areas can be reduced or even avoided via the integration of battery storage systems in the charging station. A central software platform concept will monitor the state of charge and knows / learns about customers charging behavior, and thus enables a highest possible utilization of the existing grid with growing e-car traffic. This platform is going to be integrated into the Urban Platform.

3.7 Action 65: Citizen's feedback mobility application

The target is to develop a new 3rd party mobility application to involve road users and citizens in traffic management. The interface has to respect open standards to address a wide community and will be integrated in the Urban Platform. Next to already installed detectors in roads it is very useful to have also access to the real time data directly from road users next to roads with detectors. The city will get a better view about current traffic situations and citizens will be involved too (A39). This concept has also to respect data about known accident black spots or for data about road conditions. It is planned to display all adapted data on city monitor backwards to citizens. These data will have impact to strategic decisions of the city to improve the mobility for next years.

3.8 Action 66: Mobility planning application

1st amendment version

There is an existing DVB App, developed by FHG and connected to VAMOS, which monitors the traffic situation of regular public transport trips (for example, the journey to work). This is interesting for irregular users who want to compare alternative offers for a particular requirement. An extension of this App will be created in MAtchUP Project and will be oriented to regular public transport users. The extended App will check whether line changes, faults or delays and will notify the user (only) in these cases by push notification.

2nd amendment version

There is an existing public transport app (DVB mobil), developed by FHG for irregular users who want to compare alternative offers for a particular requirement. An extension concept for this App or a standalone version will be created in the MAtchUP project and will be targeting regular users (commuters). The App will use the mobility notification service (Action 27) in order to check if daily commutes (either via public or private transport) are affected and will notify the user (only) in these cases by push notification and recommends an alternative route or transport mode. It will then propose alternative transport routes or modes of transport to make a better use of the traffic network from a global management perspective.

3.9 Action 67: Smart meter gateway for electromobility

The standardized infrastructure of this intelligent Smart Meter Gateway integrated in the Urban Platform forms the basis for interlinking the necessary services and thus creating an integrative overall solution (as an "enabler" for electromobility). This

This project has received funding from the European Union's Horizon 2020 research and innovation programme under Grant Agreement N°774477

Gateway controls uniformly the access to endpoints, controls the delivered power and measures wattage and the integration with the smart grid infrastructure. Its integration in the Urban Platform provides a flexible basis for the users, which as a residential and parking space manager plays a key role in the proper provision of non-public loading infrastructure.

This project has received funding from the European Union's Horizon 2020 research and innovation programme under Grant Agreement N°774477

4 Executive project description of each action

4.1 Action 23: Optimal use of charging infrastructure

4.1.1 Management structure

The action is led by FHG with contributions from DWG and VON.

4.1.2 Technical specification

The battery data from electric vehicles, collected within A19, is used in this action in order to predict charging demand forecasts based on the current state of charge. This demand forecast is provided to other MAtchUP actions, such as A24. The calculation of the demand forecast makes use of the big data functionalities from A62.

4.1.3 Planning of the tasks

Year 1				Year 2				Year 3	Year 4	Year 5
Q1	Q2	Q3	Q4	Q5	Q6	Q7	Q8			
(1)	(1)									
	(2)	(2)	(2)							
				(3)	(3)					
						(4)				
						(5)	(5)	(5)	(5)	(5)
						M1	M2		M3	

(1) Design phase
(2) Selection of equipment and installers
(3) Installation of hard-/software
(4) Start of operation
(5) Monitoring

(M) Next milestones (M1, M2, M3,…)

4.1.4 Health, safety and waste management requirements

Not applicable

This project has received funding from the European Union's Horizon 2020 research and innovation programme under Grant Agreement N°774477

4.1.5 Risks considered ex-ante and proposed risk-mitigation measures

Risk of no data availability from electric vehicles due to GDPR concerns. In order to mitigate the risk, DRE is in close contact with the city's data protection officer and the personnel representatives in order to discuss involved concerns and find solutions acceptable to all sides.

This project has received funding from the European Union's Horizon 2020 research and innovation programme under Grant Agreement N°774477

4.2 Action 24: Smart management for electromobility

4.2.1 Management structure

The Action 24 Smart Management for electromobility includes several sections, which are processed in a broad project team. The DWG acts as an action leader. In addition to coordination, the main task is the technical. In addition, DREWAG NETZ takes into account the electric grid effects of a smart energy system. Employees from the network, sales and IT work together to achieve this.

Fraunhofer IVI supports technical implementation through measurement and analysis concepts. They adopt simulation of an energy management system, forecast from store needs, car tracking, simulation of battery aging and more (Actions 23 and 54).

DRE is in charge of the mobility points of the LHC Dresden.

4.2.2 Technical specification

In order to advance synergy in the project, there was a substantive collaboration to the Action 54 and Action 23. The aim of Action 24 is to test and analyze a useful energy management system for electric charging stations. Depending on the implementation, there are varying billing procedures and possible special tariffs for the end user, due to optimised utilization with reduced network load.

To investigate these highlights in a prototype, the mobility point Fetscherplatz was selected. At the mobility point are three fast charging stations, each 150 kW max. power on 2 charging points, the italian- company Alpitronic and a standard charging unit (2 by 11 kW) from the company Walther Werke. The fast charging stations are paired at a lithium-ion memory with a maximum power of 280 kW and a storage capacity of 240 kWh. With a considered simultaneity, this results in a connection of the total system of 140 kW, according to which upstream network components are designed. Figure 2 shows the rough connection concept with preceding network, whereby the system is connected to its own exit of the substation.

This project has received funding from the European Union's Horizon 2020 research and innovation programme under Grant Agreement N°774477

Figure 2: System image connection concept Mobility Point Fetscherplatz

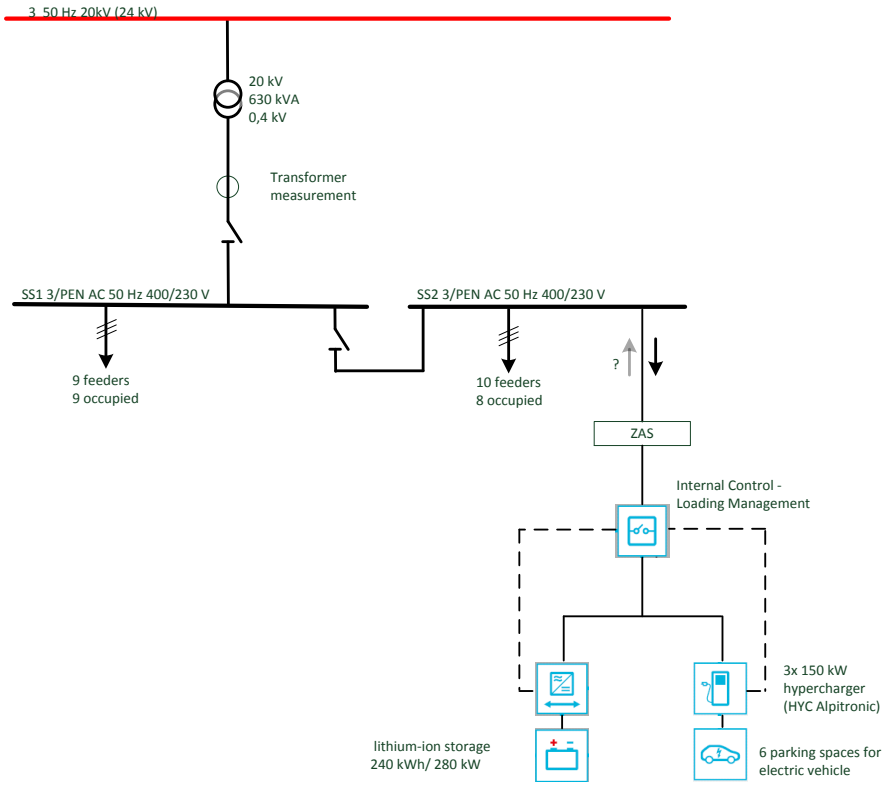

Other network outlets are mainly connected to consumers (households and businesses), including the District Future House (Action 9). In recent years, there has already been a maximum load of 70 to 90% of the installed transforming stations. This underlines the importance of an intelligent energy management system in order to allow customers to load at full load power and as little additional grid load as possible.

Measuring and management facilities are necessary for the implementation of such an energy management system. In addition, information of the loading process or the user and his vehicle can be gained by the charging station and usefully introduced as services. A reservation system could forecast future network load and, if necessary, offer customers a separate tariff. This allows the customer to be offered lower prices or maximum charging power at a time of lower network load.

In addition to the added measuring points in the preceding network, network calculation and analysis tools are necessary. The collected data must be stored, evaluated and transferred to the installed sensors of internal charging control. This requires close cooperation between the network operator and the charging stations and storage manufacturers. The Urban City Platform or a similar data retention layer can be thought of as a data hub.

The aim is to use intelligent measurement systems (Action 67) for a secure exchange of data, with barriers in certification and data security (data protection) making practical use difficult.

The practical implementation of the management system is to be considered theoretically by simulating different network states and loads of charging operations

This project has received funding from the European Union's Horizon 2020 research and innovation programme under Grant Agreement N°774477

(Action 54). In the same way, the forecasting of charging operations plays an important role in the charging and discharging cycles of the District Storage (Action 18). These simulations can be supplemented and substantiated by real measurements at a corresponding market ramp-up.

4.2.3 Planning of the tasks

2018				2019				2020	2021	2022
Q1	Q2	Q3	Q4	Q5	Q6	Q7	Q8			
		(1)	(1)	(1)	(1)					
				(2)	(2)	(2)				
						(3)	(3)	(3)		
							(4)	(4)		
								(5)	(5)	(5)
							M1	M2		

(1) Design phase
(2) Selection of equipment and installers
(3) Installation of hard-/software
(4) Start of operation
(5) Monitoring

(M) Next milestones
(M1) Closure construction phase Fetscherplatz – Begin of implementation, measurement systems
(M2) Implementation of networking energy management – Monitoring and management of an intelligent energy system with charging stations and storage system

4.2.4 Health, safety and waste management requirements

Not applicable

4.2.5 Risks considered ex-ante and proposed risk-mitigation measures

Ongoing negotiations with Vonovia on the specific arrangement of car sharing.

Still pending contract negotiations on loading points at public and private parking areas (see Action A11 and Action A22).

There is no BSI-certified SMGW yet, so it is questionable as an energy management system.

This project has received funding from the European Union's Horizon 2020 research and innovation programme under Grant Agreement N°774477

4.3 Action 25: Urban mobility assistance

4.3.1 Management Structure

The action is led by DRE in cooperation with TUD and city departments.

4.3.2 Technical specifications

The original planed App was given up for a solution offering various apps the data provided by the city council. An interface was implemented and as pilot the parking solution was implemented in the municipal App HandyParken. The further development will offer the access to various app providers for parking solutions to allow nationally/internationally used apps to use the developed interface. The planned extension for intelligent routing and ride-sharing will not be implemented at the moment. There are various solutions in the market place that cater for this need which led to the decision not to follow on this course. It is currently under discussion to use the impetus brought by MAtchUP to implement an application which makes use of traffic management information to allow a mobile service called “smart intersection” to better protect vulnerable road users.

<u>More details on pilot parking service:</u>

The new HandyParken-App has been in productive use in Dresden since the end of November 2018. The electronic parking ticket is valid for all public parking spaces within the city. Technically, it is a central database for storing vehicle license plates, the parking zone with the associated parking ticket machines and the desired parking duration. The electronic parking ticket can also be extended on a mobile basis if required. It is a web application based on the Apache Wicket framework. It can be run on all common web browsers at the address www.dresden.de/e-parkschein. Until now, online payments could be made by credit card and PayPal. Recently, the payment variants Giropay and Paydirect have also become available. The parking tickets are also checked by the Public Order Office using mobile devices. Only the license plate number is scanned and a query is made to the central database via interface REST-API. An additional interface REST-API has also been developed to connect other parking providers. In this interface, all relevant meta data for the creation of an electronic parking ticket are made available to the third-party provider and as a result the corresponding booking record is returned to the central database for storage. In the platform there are still numerous evaluation reports in the formats Excel and PDF.

This project has received funding from the European Union’s Horizon 2020 research and innovation programme under Grant Agreement N°774477

4.3.3 Planning of the tasks

Year 1				Year 2				Year 3	Year 4	Year 5
Q1	Q2	Q3	Q4	Q5	Q6	Q7	Q8			
					(1)					
					(2)	(2)	(2)			
						(3)	(3)			
						(4)				
						(5)	(5)	(5)	(5)	(5)
								M1, M2 M3, M4	M5	M6

(1) Design phase
(2) Selection of equipment and installers
(3) Installation of hard-/software
(4) Start of operation
(5) Monitoring

Next milestones:

- Until 03/2020: Development of further reports (M1)
- Until 03/2020: Printing of proof of purchase and collection of electronic parking tickets purchased monthly (M2)
- Until 09/2020: Change of license plates for users (e.g. when changing cars or car sharing) (M3)
- Until 09/2020: Connection of further external providers (M4)
- Until 09/2021: Storage of credit card information (hashtag only) for registered users (M5)
- Until 09/2022: Integration of the web application into the new Dresden-Bürger-App (M6)

4.3.4 Health, safety and waste management requirements

Not applicable

4.3.5 Risks considered ex-ante and proposed risk-mitigation measures

- Preparation of legal issues time consuming
- Fear of rebound effects

This project has received funding from the European Union's Horizon 2020 research and innovation programme under Grant Agreement N°774477

4.4 Action 26: 1 intermodal mobility hub

4.4.1 Management Structure

DVB is planning to implement the “MOBIpunkt” together with LHD and DRE with car sharing, bike sharing and E-charging of electric vehicle and bicycles. The DVB is going to be the operator.

Owner of the required land and land is the LHD. Electricity is supplied by DREWAG.

Car sharing and bike sharing is run by local partners teilAuto and Nextbike.

4.4.2 Technical specifications

Mobility points are located near public transport stops. They demonstrate the various possibilities of sustainable mobility and include car sharing, bike sharing and e-car charging stations. On clearly visible public areas there are storage areas for the mentioned offers. A uniform corporate design and the brand strategy MOBI should present a memorable appearance.

Figure 3: Layout plan mobility point Fetscherplatz

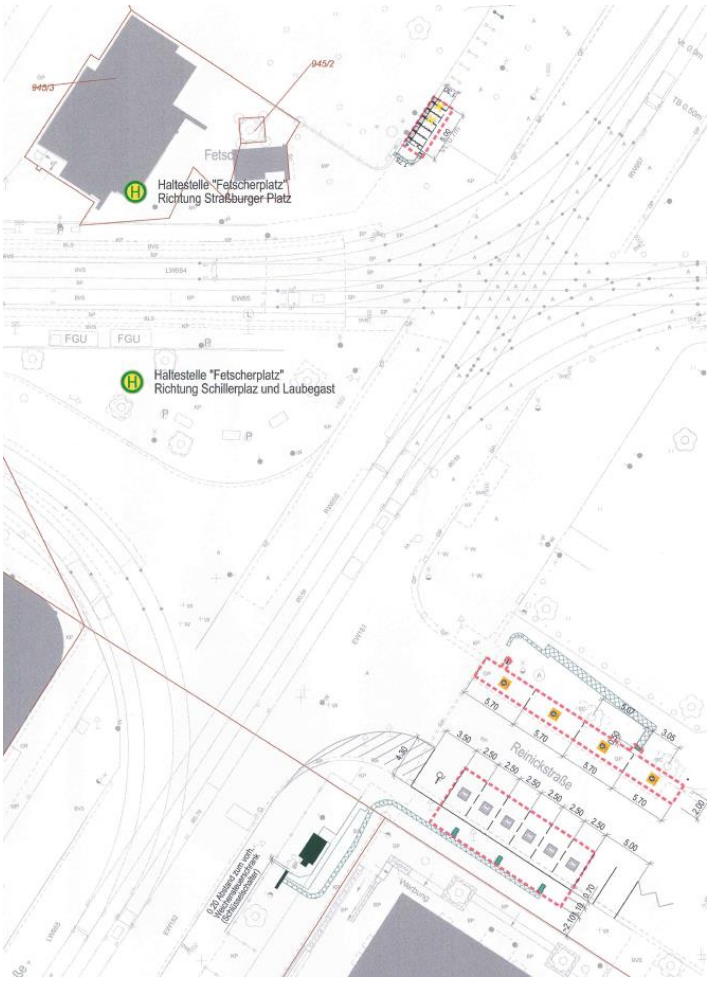

This project has received funding from the European Union’s Horizon 2020 research and innovation programme under Grant Agreement N°774477

4.4.3 Planning of the tasks

Year 1				Year 2				Year 3	Year 4	Year 5
Q1	Q2	Q3	Q4	Q5	Q6	Q7	Q8			
(1)	(1)	(1)	(1)							
	(2)	(2)	(2)	(2)	(2)	(2)				
			(3)	(3)	(3)	(3)	(3)	(3)		
								(4)		
								(5)	(5)	(5)
							M1	M2		

(1) Design phase
(2) Selection of equipment and installers
(3) Installation of hard-/software
(4) Start of operation
(5) Monitoring

Next Milestones:

(M1): Planning and inauguration of mobility hub Fetscherplatz in December 2019

(M2): Planning and inauguration of mobility hub Bönischplatz in summer 2020

Starting 09/2019 [M24]:

- Public Campaign in Dresden for promoting the mobility hubs, the multimodal app and the brand MOBI
- Multimodal App MOBI 1.0 is going to be available

4.4.4 Health, safety and waste management requirements

Not applicable

4.4.5 Risks considered ex-ante and proposed risk-mitigation measures

- Complex coordination of partners
- Legal issues concerning car sharing in public space
- Evaluation of the design concept from the different point of views (marketing, urban design, cooperate design)
- Finding company for building the first mobility hub
- Finding a company for planning further mobility hubs

This project has received funding from the European Union's Horizon 2020 research and innovation programme under Grant Agreement N°774477

4.5 Action 27: Mobility notification

4.5.1 Management structure

Lead by FHG, integration by FHG into DVB app.

4.5.2 Technical specifications

- Trip Monitoring and Alerting (Push Notifications) Service on Delays, Disruptions, Timetable Changes for integration into Smartphone Apps
- Proposing multimodal Alternatives

4.5.3 Planning of tasks

Year 1				Year 2				Year 3	Year 4	Year 5
Q1	Q2	Q3	Q4	Q5	Q6	Q7	Q8			
(1)	(1)									
	(2)	(2)	(2)							
				(3)	(3)					
						(4)				
						(5)	(5)	(5)	(5)	(5)
						M1	M2		M3	

(1) Design phase
(2) Selection of equipment and installers
(3) Installation of hard-/software
(4) Start of operation
(5) Monitoring

(M) Next milestones (M1, M2, M3,…)

Next steps: Integration into DVB mobil App

4.5.4 Health, safety and waste management requirements

Not applicable

4.5.5 Risks considered ex-ante and proposed risk-mitigation measures

None

This project has received funding from the European Union's Horizon 2020 research and innovation programme under Grant Agreement N°774477

4.6 Action 64: Charging station and battery storage platform

4.6.1 Management structure

The action is led by DRE.

4.6.2 Technical specification

Action 64 is built upon the progress of Action 24 where the aim is to test and analyze a useful energy management system for electric charging stations including the use of a battery central storage. Depending on the implementation of this energy management system, there are varying billing procedures and possible special tariffs for the end user, due to optimized utilization with reduced network load.

The aim of Action 64 is to make available and visualize the information collected from the energy management system (Action 24) concerning the central district storage on the Urban City Platform. At this moment this information will not be used to include learning from charging behaviour as this proved to be more difficult than anticipated. This remains a task that we will need to tackle within a parallel project endeavour.

4.6.3 Planning of tasks

Year 1				Year 2				Year 3	Year 4	Year 5
Q1	Q2	Q3	Q4	Q5	Q6	Q7	Q8			
								(1)		
								(2)		
								(3)		
								(4)		
								(5)	(5)	(5)
						M1	M2		M3	

(1) Design phase
(2) Selection of equipment and installers
(3) Installation of hard-/software
(4) Start of operation
(5) Monitoring

(M) Next milestones (M1, M2, M3,…)

M1 Until 11/2019 [M26]: Realization of the charging station and battery storage platform

This project has received funding from the European Union's Horizon 2020 research and innovation programme under Grant Agreement N°774477

M2 Until 12/2019 [M27]: Technical concept for connecting charging stations to the Urban Platform and for collecting and evaluating data on the charging infrastructure‘s state and on users‘ charging behavior. This includes amongst others required metering devices, data flows, the definition of open smart meter gateways, etc.

4.6.4 Health, safety and waste management requirements

Not applicable

4.6.5 Risks considered ex-ante and proposed risk-mitigation measures

Software might not allow accessing the storage data. Mitigation difficult as the priority is on storage system implementation then the data visualization – but discussion if necessary with the storage software provider.

This project has received funding from the European Union’s Horizon 2020 research and innovation programme under Grant Agreement N°774477

4.7 Action 65: Citizen's feedback mobility application

4.7.1 Management structure

The action is led by DRE and executed by the "Chair of Traffic Control and Process Automation" of the "Institute of Traffic Telematics" of TUD. The "Chair of Traffic Control and Process Automation" is responsible for the development, implementation and operation of the mobility application BikeNow.

4.7.2 Technical specification

BikeNow is a prototype of an app which gives cyclists a speed advice to approach intersections and arrive when the signal is showing the green light. The prototype is working well but needs enhancement before it can be released.

Within the MAtchUP project the existing prototype of BikeNow shall be enhanced in a way that it can be released in a first version. This first release will be a simple app with a visual UI and a feedback function. It can be used on up to six defined routes and provide speed recommendations in good quality. Anonymized tracking data will be collected and saved for further processing in a database management system. Routing and free floating will not be functional in the first release.

The BikeNow system consists of 2 parts:

a) Back-end system (traffic management system and gateway server)
b) BikeNow smartphone app

Figure 4: System structure of BikeNow

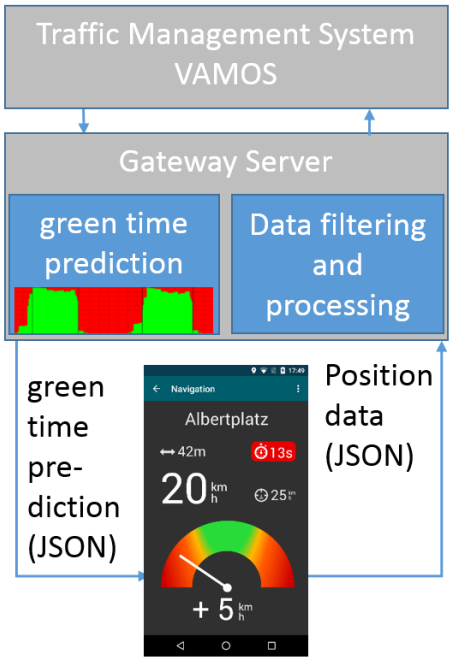

This project has received funding from the European Union's Horizon 2020 research and innovation programme under Grant Agreement N°774477

Operating principle (according to figure 4):

The green time prediction

The current state of signaling of traffic lights in Dresden is committed to the traffic management system VAMOS with a delay of approximately 2 minutes. Using these data, VAMOS is calculating a prediction for traffic lights - the green time predictions. These predictions are sent to the gateway server.

Gateway server

The gateway server is interposed between the traffic management system and the smart phones. It is providing the green time predictions for the app and is collecting the position data from the users, which are filtered, anonymized, processed and saved in a database.

BikeNow app

The app knows the position of the smart phone, the route which the cyclist is going to use and the current speed of the cyclist. Using the position data and the route information, the app registers on the gateway server for the next traffic light and the server pushes the requested green time prediction to the app. Using this prediction and the other information, the app calculates a range of speed, in which the traffic light can be reached while the signal is showing the green light. This information is visualized on the display of the smart phone. Among this, additional information like the difference between the recommended speed and the current speed and the name of the next intersection are displayed. GPS-position data are collected in the background and sent to the gateway server.

4.7.3 Planning of tasks

Year 1				Year 2				Year 3	Year 4	Year 5
Q1	Q2	Q3	Q4	Q5	Q6	Q7	Q8			
								(1)		
								(2)		
								(3)		
								(4)	(4)	
								M1 M2	M3	

(1) Consolidation and optimization of previous developments of the app Selection of equipment and installers
(2) Consolidation and optimization of previous developments of the backend Start of operation
(3) Definition and preparation of routes

This project has received funding from the European Union's Horizon 2020 research and innovation programme under Grant Agreement N°774477

(4) Testing

Next Milestones:

- Until 06/2020: App and backend are stable and reliable (M1)
- Until 09/2020: Routes are defined, green time prediction is working (M2)
- Until 12/2020: Tests are conducted, first release of app (M3)

4.7.4 Health, safety and waste management requirements

Not applicable

4.7.5 Risks considered ex-ante and proposed risk-mitigation measures

None

This project has received funding from the European Union's Horizon 2020 research and innovation programme under Grant Agreement N°774477

4.8 Action 66: Mobility planning application

4.8.1 Management structure

DVB is the leader in this action and works closely with FHG.

4.8.2 Technical specification

The aim of Action is to realize a demonstrator app for an information and booking service of MOBI services car sharing, bike sharing and in perspective other modes of transport.

4.8.3 Planning of tasks

Year 1				Year 2				Year 3		Year 4	Year 5
Q1	Q2	Q3	Q4	Q5	Q6	Q7	Q8	Q9			
to [M3]	**to [M6]**	**to [M9]**	**to [M12]**	**to [M15]**	**to [M18]**	**to [M21]**	**to [M24]**	**to [M27]**	**to [M36]**	**to [M48]**	**to [M60]**
(1)	(1)	(1)	(1)	(1)	(1)	(1)	(1)	(1)			
			(2)	(2)	(2)	(2)	(2)	(2)			
						(3)	(3)	(3)	(3)		
								(4)	(4)		
									(5)	(5)	(5)
						M1	M2			M3	

(1) Design Phase
(2) Selection of equipment and installers
(3) Installation of hard-/software
(4) Start of operation
(5) Monitoring

Next milestones:

- Until 03/2020 [M30]:
  - Integration of the mobility notification service in the existing DVB App (Action 27)
  - integration of a bike sharing system (engaged by DVB)
  - Presentation of a demonstrator app for MOBI services powered by moovel

This project has received funding from the European Union's Horizon 2020 research and innovation programme under Grant Agreement N°774477

    - next steps in accompanying of the market research: user test for evaluation the MOBI demonstrator app versus other app solution on the market
- Until 09/2020 [M36]:
    - evaluation of steps done via further market research
    - integration of a carsharing system
    - live field testing and calibration of push notifications and alternative recommendations

4.8.4 Health, safety and waste management requirements

Not applicable

4.8.5 Risks considered ex-ante and proposed risk-mitigation measures

Due to protracted negotiations with third party provider, there will not be a functional demonstrator app before end of this year

Due to limited functionalities of backend systems in DVB sales compartment, further programming therein will be necessary.

Meantime, DVB decided to create an own backend system with the basic function information, booking and clearing for MOBI services. The realization will be done outside of MAtchUP. Particularly the results of market research will be considered in this project.

The implementation of bike sharing booking feature in the existing DVB app was postponed until a decision for the further bike sharing provider in Dresden.

This project has received funding from the European Union's Horizon 2020 research and innovation programme under Grant Agreement N°774477

4.9 Action 67: Smart meter gateway for electromobility

4.9.1 Management structure

For the implementation of an intelligent measuring system (iMSys), consisting of smart meter gateway and modern measuring device, and a control box (STB) into a charging station (CS), a project group was launched. In addition to the technical implementation, this project group is working on the system structure of data exchange and the control of a charging station via the new path of intelligent measuring systems. These include information preservation and aggregation, as well as the implementation of managing orders derived from it, such as reservation requirements or charge power reductions.

The project group is led by Action Leader DREWAG NETZ (DWG) and consists of internal participants from departments of network, communication, IT and sales, as well as external companies Robotron (RDS) and Walther Werke (WW).

In addition to the working group management, the responsibility of DWG lies in the definition of the data exchange of the charging stations, the construction (procurement, assembly, etc.) of a prototype and the development of an overall concept (use case) with the aim of providing data and control of external market participants, e.g. through the Urban City platform.

The partner RDS supports this process and provides the necessary software system environment. It also assists in the translation and system-side implementation of protocol languages and their encryption, as well as their interface management and the eventual visualization.

As a charging station manufacturer, partner Walter Werke establishes the necessary connection for the exchange of data on the side of the charging stations.

4.9.2 Technical specification

An intelligent measuring system consists of a smart meter gateway to a modern measuring device. A control box is used for TLS encrypted communication with other components. The following figure (Figure 5) shows the general system overview and its market participants. The SMGW serves as central communication space and offers the following physical interfaces:

1. LMN (local meteorological network): Transfer of meter data via predefined interface
2. WAN (wide area network): Communication interface to external market participants, as well as the Smart Meter Gateway Administrator, usually takes place via Ethernet or cable-less connection (e.g. LTE)
3. HAN (home area network): Communication interface to the last consumer or a service technician usually via Ethernet or wireless
4. CLS: (controllable local system): Bidirectional transfer of data and control signals via an Ethernet interface with a control box (where different connection scenarios: Cascading, wireless connectivity, etc.)

This project has received funding from the European Union's Horizon 2020 research and innovation programme under Grant Agreement N°774477

Figure 5: System image interfaces of a SMGW (Source: TR 3109-1 page 14)

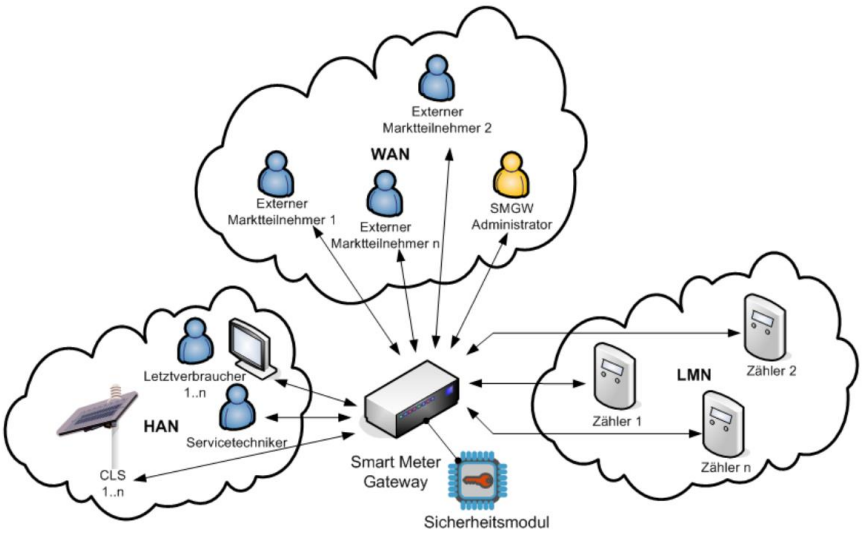

This general system image is implemented by the different actor roles in the project. A key component of Action 67 is the establishment of a WAN interface with external market participants such as the Urban City platform and a CLS coupling of controllable electric devices via an intermediary control box. The STB is used to build an encrypted channel (TLS) from the internal CS controller to the SMGW in the protocol language of the CS and its control: OCPP or Modbus TCP. OCCP is a freely available application protocol for communication between electric vehicle (EV) charging stations and a central management system, developed by E-Laad foundation in the Netherlands.

A hardware-technical decision for the choice of as SMGW and STB manufacturer has not yet been taken place due to the pending certification. In a technology comparison, therefore, different devices from the manufacturers: PPC, EFR, EMH, Theben, Prolan and others are compared in different test methods.

The implementation of such communication requires system-side certification of the components (SMGW, STB). This is done by the GWA operation and a provided safety module.

Figure 6: System image Robotron GWA Manager (Source: www.robotron.de)

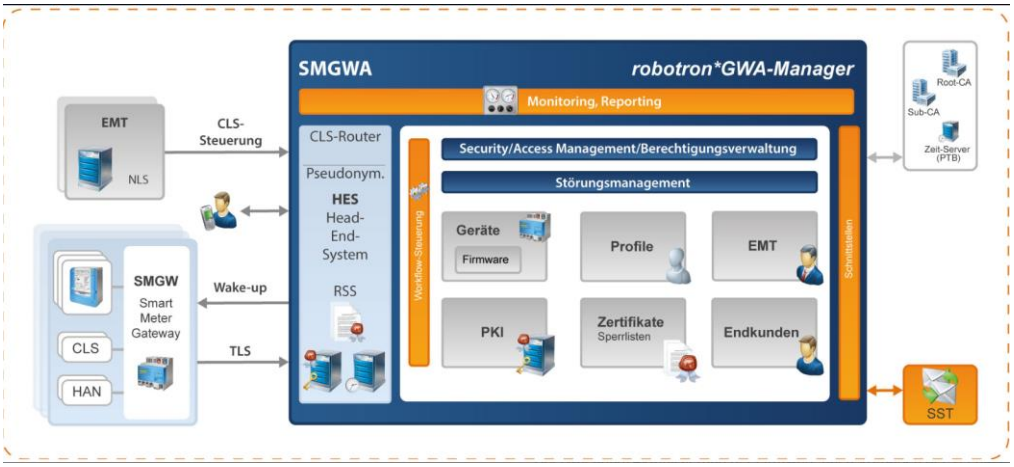

This project has received funding from the European Union's Horizon 2020 research and innovation programme under Grant Agreement N°774477

The communication structure and system-related implementation of the communication of an active external market participant with the terminal (here the charging station) via a SMGW is further defined in the TR 03109 via WAF and HAF (WAN and HAN use cases), and defined by WKS and HKS (WAN and HAN communication scenarios). More precise description can be found in the directive. Derived from this guideline different systems are implemented (see Figure 7), which are currently under development in the e-system. The system image includes the GWA operation for certificate distribution, hybrid encryption, and device management.

For an STB, there is no specification with such a normative character. They aim to contribute such a specification for cross-manufacturer standardization.

This system forms the basis for the operation of a SMGW with a CLS interface and its data exchange for the provision of services. The aim of Action 67 is to create a balance with the components of a charging station described in the following image:

Figure 7: System set-up of an electric charging station

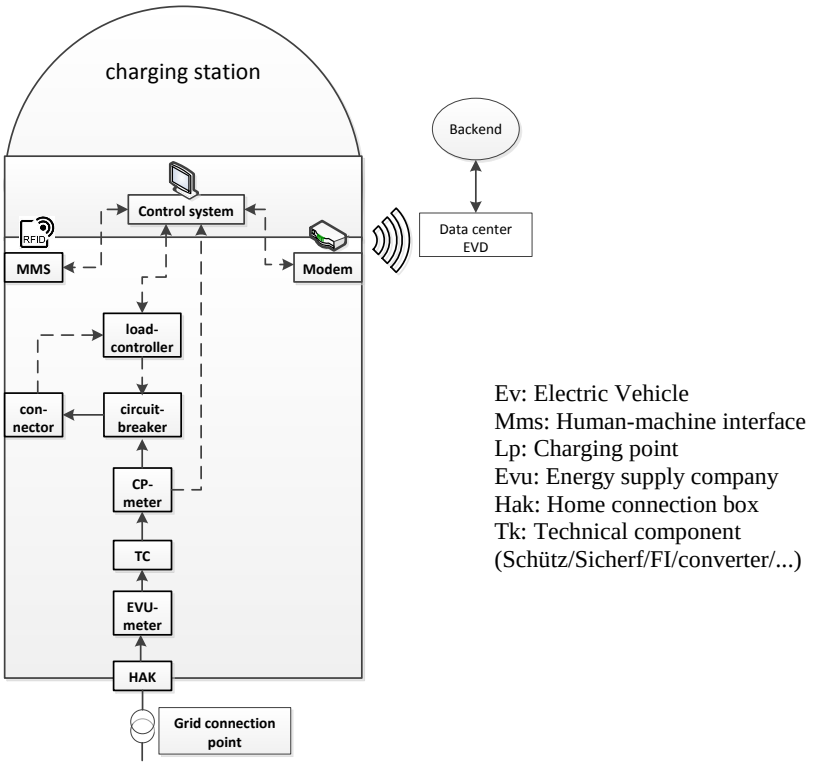

The main component is the CS internal control, which receives data from the charging point meter system and the connector to individual charging operations, as well as manages charging operations via the charging controller. External data exchange is currently carried out via a human machine interface (e.g. RFID) or an integrated modem with a backend connection.

In the project, the great challenge now exists to combine this hard and software-side structure with the system world of intelligent measurement systems.

This project has received funding from the European Union's Horizon 2020 research and innovation programme under Grant Agreement N°774477

4.9.3 Planning of tasks

2018				2019				2020	2021	2022
Q1	Q2	Q3	Q4	Q5	Q6	Q7	Q8			
(1)	(1)	(1)	(1)	(1)						
				(2)	(2)					
				(3)	(3)	(3)	(3)			
							(4)	(4)	(4)	
								(5)	(5)	(5)
							M1	M2	M3	

(1) Design phase
(2) Selection of equipment and installers
(3) Installation of hard-/software
(4) Start of operation
(5) Monitoring

(M1) Finish of prototyping
(M2) Starting rollout in public infrastructure
(M3) Starting productive Phase

4.9.4 Health, safety and waste management requirements

Not applicable

4.9.5 Risks considered ex-ante and proposed risk-mitigation measures

Uncertain final location in the LH-district for charging infrastructure (see Action 11).

Not finished certification process of federal office for information security for Smart Meter Gateways.

Not finally published version of resolution for coordination functions on operating level, worked out by FNN (Currently no specifications for STB).

The projects for soft and hard-goods integration of an iMSys into a CS pose risks:

1. Greater differences in manufacturer's size in the construction of the charging stations, which leads to individual assembly concepts
2. Manufactor-specific data transfer (unt. Status of minutes)
3. No Norm/policy sheet specifications in Dtl. for the integration of iMSys into CS

This project has received funding from the European Union's Horizon 2020 research and innovation programme under Grant Agreement N°774477

5 Status of the intervention

5.1 Action 23: Optimal use of charging infrastructure

5.1.1 Status of the intervention

During the reporting period, requirement specification for load prediction module was main focus; first data collection was successfully implemented with specific charging data from BMW i3 cars; specification of required data and their sampling rate for charging load prediction was performed.

A set of data loggers for data gathering (as basis for the above described calculations) have been prepared to be installed in a variety of e-cars in Dresden (A19). Technical installation guidelines are negotiated with the car manufacturers. Data privacy issues and concerns have been discussed within the consortium and are to be settled.

5.1.2 Risks found and corrective actions performed

None

5.1.3 Business model and financial scheme applied

For this action the total DWG-budget amounts to 37,362.50 €. 26,153.75 € of this amount will be financed by MAtchUP funds, the rest of 11,208.75 € will be funded by DWG and ENSNTZ.

- 19,890 € for 3 employees pro rata temporis over three years. After the end of the MAtchUP-project in 2022 the employees will work for ENSNTZ in other projects.
- 10,000 € for equipment. 10,000€ depreciation of 2 AC Charging management controller (total cost: 20.000€ - duration: 6 yr – use in the project 3 yr – depreciation ratio: 50%).
- 7,472.50 € indirect costs declared on the basis of the flat-rate of 25% of the eligible direct costs (=0,25 x (19,890€+10,000€)).

In the case of the approval of the 2nd amendment the financial scheme will change in the following way:

For this action a total DWG- budget is 78,800 €. 55,160 € of this amount will be financed by MAtchUP funds, the rest of 23,640 € will be funded by DWG and ENSNTZ.

- 53,040 € for 3 employees pro rata temporis over three years. After the end of the MAtchUP-project in 2022 the employees will work for ENSNTZ in other projects.
- 10,000 € for equipment. 10,000€ depreciation of 2 AC Charging management controller (total cost: 20.000€ - duration: 6 yr – use in the project 3 yr – depreciation ratio: 50%).
- 15,760 € indirect costs declared on the basis of the flat-rate of 25% of the eligible direct costs (=0,25 x (53,040€+10,000€)).

This project has received funding from the European Union's Horizon 2020 research and innovation programme under Grant Agreement N°774477

This action has no business model for its result, as it is no standalone product. It is rather a single step in a holistic software tool chain.

5.1.4 Citizen engagement strategy implemented

None

5.1.5 Next steps

See chapter 4.1.3

This project has received funding from the European Union's Horizon 2020 research and innovation programme under Grant Agreement N°774477

5.2 Action 24: Smart management for electromobility

5.2.1 Status of the intervention

A measurement concept needs to be developed to implement smart management for electric mobility. Depending on built-in sensors and actuators, certain use cases need to be developed in an application concept.

Figure 8: Measuring at charging stations with storage and energy management system (ems)

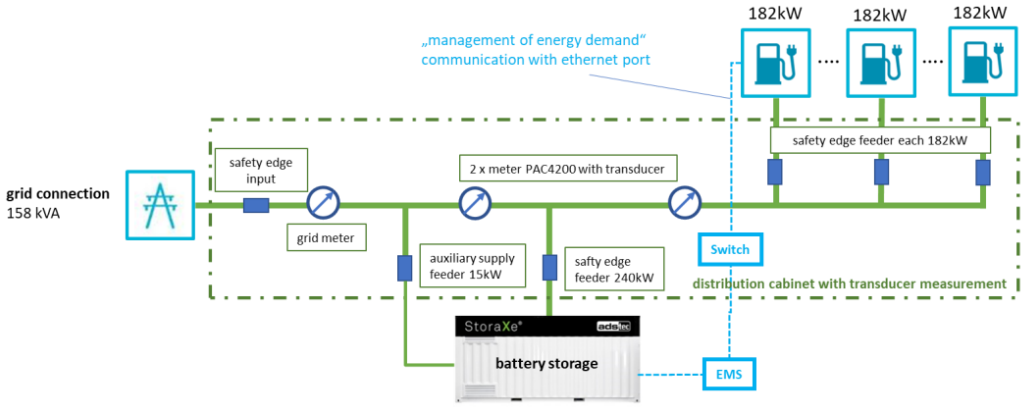

Figure 8 shows the measuring points, switchboards and decommissions in the structure. They are placed in a distribution cabinet, so that external data access and, if necessary, the installation of additional measuring devices is possible.

There are several use cases for the Fetscherplatz mobility point.

1. Use case: Utilization and load of charging infrastructure with energy storage

   The first step is to investigate local electric management. For this purpose, the utilization of each charging station (CS) is analyzed as well as the use of the power storage system. Evaluation variable are e.g.: max. discharge depth, number of cycles, loss performance

   For this purpose, data from the charging processes are examined using the smart meters in the CS and data from the internal control of the energy storage system.

   Other evaluation factors of the CS and storage system on the power quality within the system and in the parent network are considered. For this purpose, separate measuring devices are to be used for evaluation according to EN 50160. In order to obtain a comparison of the emissions on the electric grid, the installation takes place several months before the charging stations is put into operation.

2. Use case: Local stress management

   A solid amount of energy is needed for an uninterrupted supply of the charging stations. This can be predicted and measured directly. The use of the power storage system allows a time of flexibility of the resulting loads. With further measurements in the overlaid power grid, the storage can be used for local load

This project has received funding from the European Union's Horizon 2020 research and innovation programme under Grant Agreement N°774477

shifting. Figure 9 illustrates this by three simultaneous charging processes, which overlap with a high load on other consumers at the transformer's collection line.

Figure 9: Example of simulation energy management Fetscherplatz

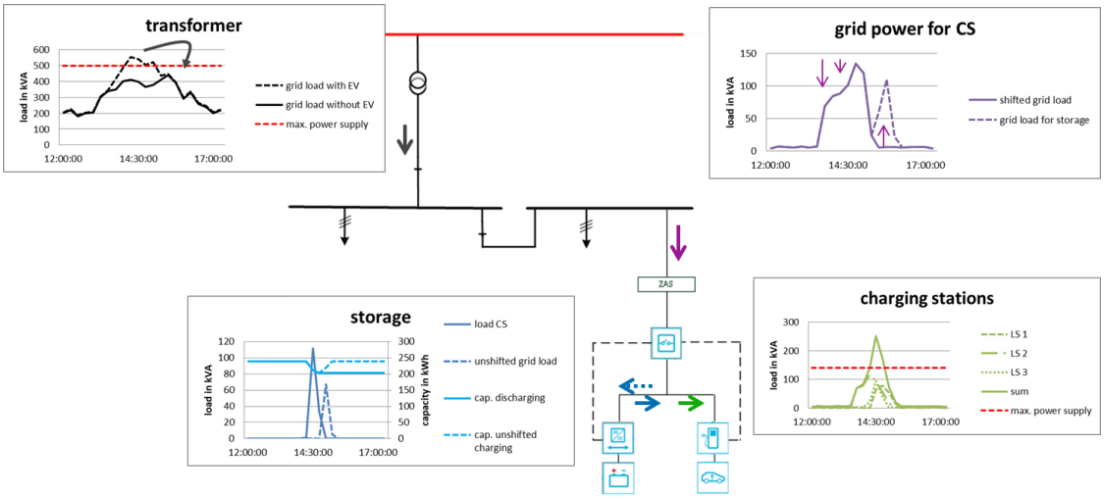

An intelligent use of the storage (time load shifting) can lead to a reduced load of the transformer, while maintaining the charging processes. In addition to this vivid example, further scenarios are to be examined theoretically, validated with measurement data and practically implemented in the final step.

3. Use case: Feed-in management and further storage use

Other uses of smart management for electromobility are applications to be investigated as swarm storage, as bottleneck management, or for network operation. Links to the District Future House can be established. Studies on the third use case are currently being discussed and a practical application is being investigated.

5.2.2 Risks found and corrective actions performed

The delay of finding localizations for charging points led to a delay in the development of use case specification.

The use of a network energy management system in the private sector of Vonovia etc. In addition, it is linked to a consent form and the data privacy policy. In further processing, the consideration was therefore focused on the public mobility point Fetscherplatz.

5.2.3 Business model and financial scheme applied

For this action after the 1st amendment the total budget is 113,200 €. 79,240 € of this amount will be financed by MAtchUP funds, the rest of 33,960 € will be funded by DWG and DWNTZ.

This project has received funding from the European Union's Horizon 2020 research and innovation programme under Grant Agreement N°774477

- 79,560 € for 4 employees pro rata temporis over three years. After the end of the MAtchUP-project in 2022 the employees will work for DWNTZ in other projects.
- 11,000 € for equipment. 11,000 € depreciation of 2 smart metering systems (total cost: 36.700 € - duration: 10 yr – use in the project 3 yr – depreciation ratio: 30%).
- 22,640 € indirect costs declared on the basis of the flat-rate of 25% of the eligible direct costs (=0,25 x (79,560€ + 11,000€)).

In the case of the approval of the 2nd amendment the financial scheme will change in the following way:

For this action a total DWG- budget is 162,925 €. 114,047.50 € of this amount will be financed by MAtchUP funds, the rest of 48,877.50 € will be funded by DWG and DWNTZ.

- 119,340 € for 4 employees pro rata temporis over three years. After the end of the MAtchUP-project in 2022 the employees will work for DWNTZ in other projects.
- 11,000 € for equipment. 11,000 € depreciation of 2 smart metering systems (total cost: 36.700 € - duration: 10 yr – use in the project 3 yr – depreciation ratio: 30%).
- 32,585 € indirect costs declared on the basis of the flat-rate of 25% of the eligible direct costs (=0,25 x (119,340€ + 11,000€)).

5.2.4 Citizen engagement strategy implemented

Electric vehicles for the tenants of the district can be provided in a smart, economic and forward-thinking way. Individual mobility in an ecological way can be raised.

The user should not be restricted in the charging process.

5.2.5 Next steps

See chapter 4.2.3

This project has received funding from the European Union's Horizon 2020 research and innovation programme under Grant Agreement N°774477

5.3 Action 25: Urban mobility assistance

5.3.1 Status of the intervention

Parking

Steps done until M24:

- Implementation of central database
- Development of the web application and integration on www.dresden.de
- Integration of the application into the theme city map
- Development of an interface as REST-API to the Public Order Office for the control of the electronic parking tickets
- Implementation of the payment interface to the payment service provider
- Implementation of a role and rights management within the application (administrator, normal user, etc.)
- Provision of an interface for connecting third-party providers as REST-API interface
- Development of different reports in Excel and pdf formats

5.3.2 Risks found and corrective actions performed

The access of 3rd party mobility application for road users will be less broad due to fear to induce additional traffic

Ways are looked into to focus more on environmentally friendly mobility – fostering bike traffic might be an option.

5.3.3 Business model and financial scheme applied

Public funding from MAtchUP will not be sufficient. To sustain the activities further resources needed. This will be provided by 3rd parties offering the service. Income is to be generated via parking and routing information.

5.3.4 Citizen engagement strategy implemented

Involvement of councilors and transparent communication of information via press releases.

5.3.5 Next steps

See chapter 4.3.3

This project has received funding from the European Union's Horizon 2020 research and innovation programme under Grant Agreement N°774477

5.4 Action 26: 1 intermodal mobility hub

5.4.1 Status of intervention

Selection of the most promising mobility hub regarding different aspects (quality of public transport, accessibility for e-cars, suitability as a pilot project, suitability for upscaling process, …)

- Interested customers regarding the design of the mobility hubs and decision for a multimodal brand
- Group discussions regarding the needs, barriers and wishes of multimodal customers
    - In general, very positive feedback of customers regarding the concept
    - Very important information for designing the mobility hub and the multimodal services
- Creation of a mock-up for showing the design concept to different stakeholders and deciding for a final draft
- Planning of mobility hub Pirnaischer Platz as a pilot for Dresden and Inauguration on 21.9. = press conference
- Planning of mobility hubs at various places in the city, also in Johannstadt (in coordination with the different partners DWG, STA, SPA, teilAuto and Nextbike)

Decision for the final design concept

- Further technical planning of the mobility hub, especially in Johannstadt
- Analysis regarding the multimodal user and their needs for a user-friendly and seamless multimodal mobility, also regarding the mobility platform
- Planning the communication concept for the first mobility hubs
- Market research regarding existing multimodal apps and their success with the customers

5.4.2 Risks found and corrective actions performed

Combination of market research for mobility hub and multimodal platform combined billing for the tasks and no separated measures

5.4.3 Business Model and financial scheme applied

- Government subsidy for building the first mobility hubs, also the mobility hub in Johannstadt
- Further grand applications planned for more mobility hubs
- Further expenses covered by own capital resources

5.4.4 Citizen engagement strategy implemented

- Better access to public transportation, also to sharing economy (Car sharing, Bike sharing),
- Less space necessary for private parking: livable design of the urban space

This project has received funding from the European Union's Horizon 2020 research and innovation programme under Grant Agreement N°774477

- Change of the modal split; less (private) car traffic; more green modes of transport,
- Modify the entrenched pattern of mobility,
- Raise the public acceptance of Car sharing, Bike sharing and electric mobility.
- Enhance the multimodal and environmentally-friendly transport behaviour
- Mobility hub as a point of social meeting with high quality
- Increased accessibility to areas which are poorly serviced by the public transportation
- Marketing for sustainable and socially viable mobility due to a visible infrastructure element in public transport areas.
- Beneficial effects on environment by reducing external factors (noise, emission, traffic jam).

5.4.5 Next steps

See chapter 4.4.3

This project has received funding from the European Union's Horizon 2020 research and innovation programme under Grant Agreement N°774477

5.5 Action 27: Mobility notification

5.5.1 Status of the intervention

Specification and implementation of an API for providing routing, schedule and real-time information from public transport operators to the mobility notification service via the regional public transport authority.

Implementation of the API specification in the mobility notification services.

Development of a public transport disruption and incident management tool:

- Capturing user and stakeholder needs and requirements during stakeholder workshops
- Development of a disruption and incident management and information exchange concept between service dispatchers and passenger information managers
- Specification of the passenger information manager‘s workplace
- Specification and development of the multitenancy disruption and incident management tool for passenger information managers (developed with Java as a Server-side Application)
- Integration and first user tests with passenger information managers
- Implementation and integration phase of services
- Development of smartphone app prototype

Figure 10: Screenshots from smartphone app prototype for mobility notifications

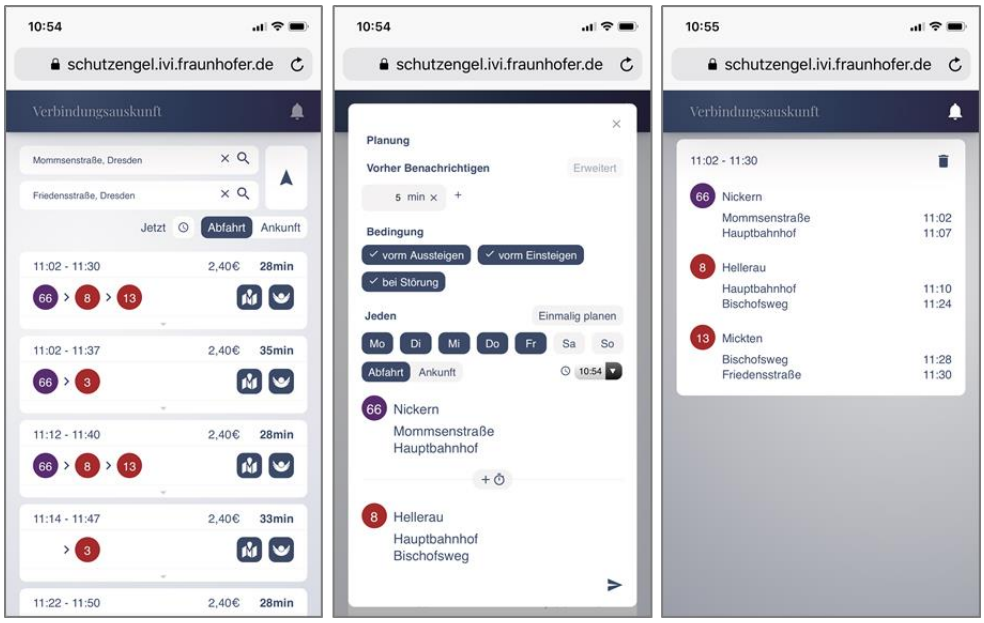

5.5.2 Risks found and corrective actions performed

None

This project has received funding from the European Union’s Horizon 2020 research and innovation programme under Grant Agreement N°774477

5.5.3 Business model and financial scheme applied

This action has no own business model, as it only delivers a software technology component. This might be included into smartphones apps that in turn will have an own business model, such as the DVB Multimodal App (Action 66).

5.5.4 Citizen engagement strategy implemented

None

5.5.5 Next steps

See chapter 4.5.3

This project has received funding from the European Union's Horizon 2020 research and innovation programme under Grant Agreement N°774477

5.6 Action 64: Charging station and battery storage platform

5.6.1 Status of intervention

To allow the visualization planed the proprietary software for the storage device has to be checked for its interface. The question remains whether this specific information can be accessed. This will become clearer when the storage device is implemented. As Action 64 is a minor issue concerning the need to implement the major actions it was decided to first implement the other actions and then to look into implementation of the issue addressed here.

5.6.2 Risks found and corrective actions performed

None

5.6.3 Business model and financial scheme

As the detailed way of implementing the platform still has to be defined, no information on potential costs, and thus on required funding and possible business models supporting the action is available at this moment in time.

5.6.4 Citizen engagement strategy implemented

A well-reasoned way of informing potential users of the infrastructure on the intervention, its necessity and the benefits on different levels will be needed in order to support the public acceptance required for monitoring individual charging behaviors.

5.6.5 Next steps

See chapter 4.6.3

This project has received funding from the European Union's Horizon 2020 research and innovation programme under Grant Agreement N°774477

5.7 Action 65: Citizen's feedback mobility application

5.7.1 Status of intervention

During the first two MAtchUP project years [M1-M24], BikeNow was identified as a suitable project to implement this action.

5.7.2 Risks found and corrective actions performed

The calculation of green time predictions is based on data provided by the traffic lights. If for some reason these data are not available any more, they can be obtained from Road Side Units (RSU). Since RSUs are using the IEEE 802.11p – standard, which is not supported by smart phones, the data have to be transferred to the traffic management system VAMOS using an existing interface.

5.7.3 Business model and financial scheme applied

Via MAtchUP the following funds are available:

- 50.000 € for one employee over 11 months

5.7.4 Citizen engagement strategy implemented

BikeNow already has a good publicity, since it has been present in media for several times:

- country wide radio station[7]
- local television,
- local newspaper[8, 9, 10, 11]

BikeNow will continue with public presentations on local fairs (like output DD[12], long night of science), presence in media and the project homepage[13].

By now, more than 200 people applied for being test users on the project homepage.

[7] https://www.deutschlandfunkkultur.de/intelligente-verkehrssteuerung-in-dresden-in-der-gruenen.1001.de.html?dram:article_id=394496

[8] https://www.dnn.de/Dresden/Lokales/Dresdner-TU-Wissenschaftler-entwickeln-App-fuer-Radfahrer

[9] https://www.dnn.de/Dresden/Lokales/In-Dresden-wird-der-Verkehr-der-Zukunft-ausprobiert

[10] https://www.bild.de/regional/dresden/dresden-aktuell/neue-app-dresden-plant-gruene-welle-fuer-radfahrer-59543278.bild.html

[11] https://www.tag24.de/nachrichten/dresden-verkehr-strassen-regelung-ampeln-autos-gps-kameras-934054

[12] https://output-dd.de/

[13] http://vkwvlprad.vkw.tu-dresden.de/

This project has received funding from the European Union's Horizon 2020 research and innovation programme under Grant Agreement N°774477

Further, BikeNow will use the communication channels provided by the MAtchUP project.

5.7.5 Next steps

See chapter 4.7.3

This project has received funding from the European Union's Horizon 2020 research and innovation programme under Grant Agreement N°774477

5.8 Action 66: Mobility planning application

5.8.1 Status of intervention

- Until M12
  - Analysis and discussion of several third party provider
  - Negotiations and signing of a contract with moovel Group as frontend technology partner und mobility service integrator.
  - Investigation of necessary backend functionalities concerning the DVB sales compartment as well as VVO planning and ticketing systems
  - Briefing and commission of a concept regarding customer needs and usability advice for a multimodal app closely regarding action #26 to a market research institute
  - Accompanying of the market research, subsequent study of the results and derivation of recommended actions / specifications
- Until end of 2018 [M15]:
  - next steps in accompanying of the market research and further consolidation of all results and maybe new specifications
  - group discussion regarding app usage in public transport and/or other mobility services such as bike sharing or car sharing
  - individual in depth interviews regarding frontend user interfaces
- Until 09/2019 [M24]:
  - proof of concept regarding push notifications and alternative recommendations

5.8.2 Risks found and corrective actions performed

Correcting the original action description for spelling and grammar errors leads to the following adapted action description:

There is an existing public transport app (DVB mobil), developed by FHG for irregular users who want to compare alternative offers for a particular requirement. An extension concept for this App or a standalone version will be created in the MAtchUP project and will be targeting regular users (commuters). The App will use the mobility notification service (Action 27) in order to check if daily commutes (either via public or private transport) are affected and will notify the user (only) in these cases by push notification and recommends an alternative route or transport mode. It will then propose alternative transport routes or modes of transport to make a better use of the traffic network from a global management perspective.

This deviation will neither cause any delays, nor will it have an impact on the project budget.

5.8.3 Business model and financial scheme applied

Further government grand application successful

This project has received funding from the European Union's Horizon 2020 research and innovation programme under Grant Agreement N°774477

- Green City Plan of Dresden got funded from the Federal Ministry of Transport and Digital Infrastructure (BMVI)

Further expenses covered by own capital resources.

5.8.4 Citizen engagement strategy implemented

None

5.8.5 Next steps

See chapter 4.8.3

This project has received funding from the European Union's Horizon 2020 research and innovation programme under Grant Agreement N°774477

5.9 Action 67: Smart meter gateway for electromobility

5.9.1 Status of intervention

The described project will be translated into a prototype, as a basis for the widespread application. The prototype is set up in three phases:

1. phase:

In the first phase, an intelligent measuring system and a control box are installed in a prototype charging station. The metering data are read remotely via a new process IP connection. This is done by developing an assembly concept, the hardware-technical implementation of this, as well as the system side device for data reading.

Figure 11: System image of a charging station with integrated SMGW and STB in Phase 1

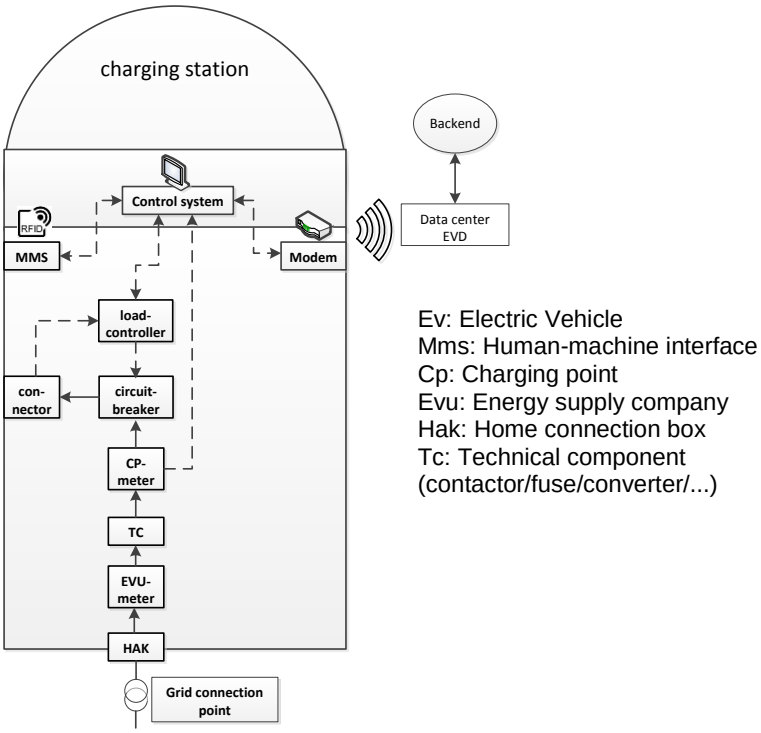

The first phase was completed by 01.05.2019 and has been successfully implemented. In the figure below the mean work values derived from the meter data are shown, which are read out via TAF 7 at a 15-min interval.

This project has received funding from the European Union's Horizon 2020 research and innovation programme under Grant Agreement N°774477

Figure 12: Derived work values from 15 min meter level transmissions of a prototype charging station with iMSys

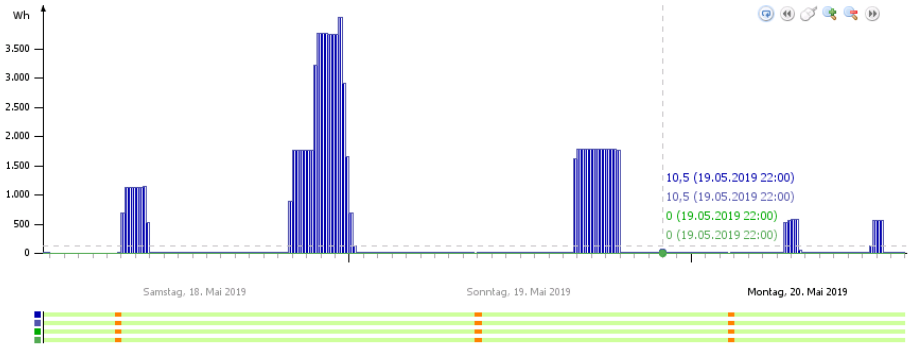

Transmission gaps in the communication network show intermittent interruptions of transmission, which can be seen on the red bars (see figure 12). In addition to the billing-relevant meter data in a 15 min time interval, charging operations, a resulting occupancy, the maximum loads, idle consumption and further can be derived.

2. phase:

In the second phase, the goal is to actively control a charging process via a mechanical pathway (relay control) and a digital interface via OCPP or Modbus TCP. Furthermore, the data transfer of OCPP should no longer take place via the internal modem, but via the encrypted path (SMGW, STB) to the backend. The following figure shows the target system structure of the second phase:

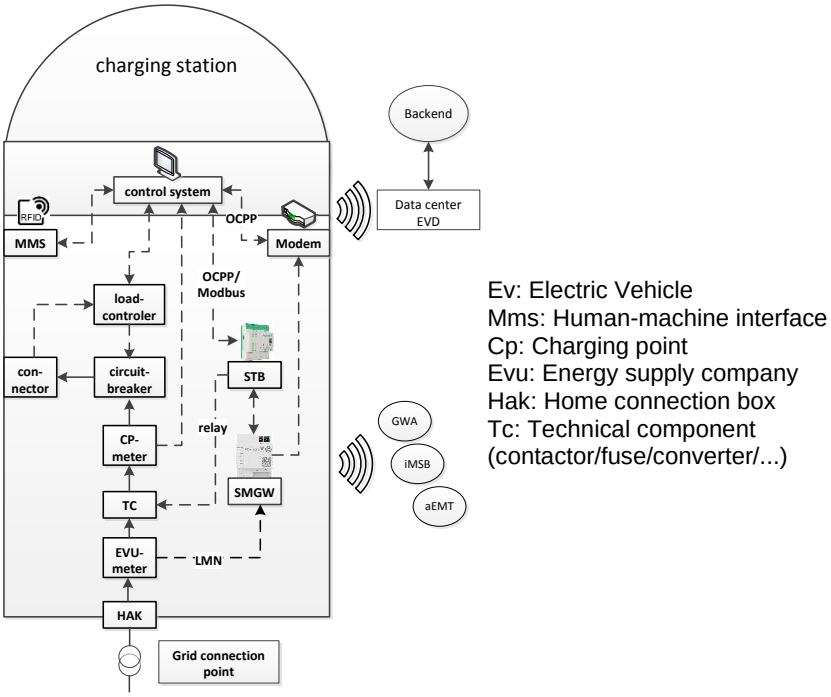

We are currently at the beginning of this phase.

This project has received funding from the European Union's Horizon 2020 research and innovation programme under Grant Agreement N°774477

3. phase:

The aim of the third phase is to integrate the CP counters for charging sharp safe billing via the path of the SMGW and the STB. For reasons of space saving and systemic simplification, a star-shaped single point communication has to be established.

Figure 13: Target system image of a charging column with integrated SMGW and STB in Phase 3

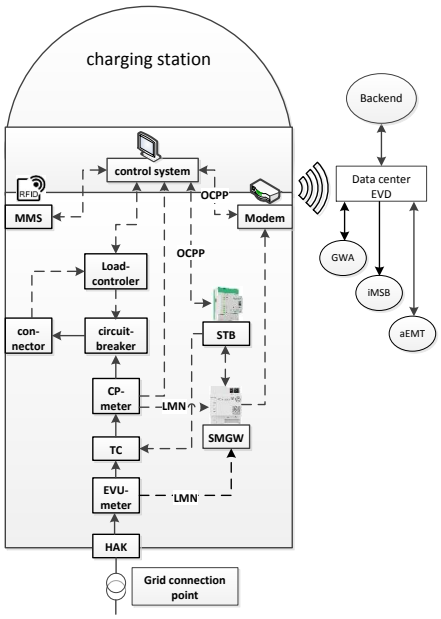

5.9.2 Risks found and corrective actions performed

1. Certification process (deferral)
2. Space problems especially in fast charging stations that are very compact
3. Temperature and humidity limits of the SMGWs vary much, which leads to unexpected conversion measures (installation temperature sensor in CS)
4. Manufacturers of CS and EV are still a long way from implementing new standards (OCPP 2.0, EN 61850 ISO 15118,...), which means that many functions are not yet possible

5.9.3 Business model and financial scheme

All measures of this action are financed by DREWAG NETZ without any funding Horizon 2020/ MAtchUP

5.9.4 Citizen engagement strategy implemented

The solutions aim to provide new tariff-models to users of charging points, one way to make electromobility even more user-friendly.

This project has received funding from the European Union's Horizon 2020 research and innovation programme under Grant Agreement N°774477

5.9.5 Next steps

See chapter 4.9.3

This project has received funding from the European Union's Horizon 2020 research and innovation programme under Grant Agreement N°774477

6 Conclusions

This deliverable aims at giving a broad overview on innovative solutions and measures to boost the e-mobility in the city. The focus lies on a new operating concept of intermodal mobility and on a mobility planning application oriented to regular public transport users. The combined actions were carried out through a strong cooperation between MAtchUP partners DWG, DVB, FHG and DRE from various branches and with different competences.

With regards to intermodal mobility, DVB introduced the multimodal brand “MOBI” with so called “MOBIpunkte” as key component of the multimodal strategy of Dresden combining all mobility needs, from public transport, car sharing, bike sharing and charging infrastructure to a mobility app. One “MOBIpunkt” will be implemented and evaluated within the MAtchUP project in the focus district Johannstadt. In addition, a demonstrator app will be realized for an information and booking service for car sharing, bike sharing and possible other modes of transport. Furthermore, a smart phone prototype was developed for trip monitoring and alerting (push notifications) on delays, disruptions and timetable changes with the aim of proposing multimodal alternatives. The next step will be to integrate the prototype into the existing DVB mobile app.

Other smart solutions include the HandyParken app and the BikeNow prototype app. The HandyParken app is in productive use in Dresden since the end of November 2018 using a central database for storing vehicle license plates, the parking zone with the associated parking ticket machines and the desired parking duration. BikeNow is a prototype of an app which gives cyclists a speed advice to approach intersections and arrive when the signal is showing the green light. The prototype is working well but needs enhancement before it can be released. Therefore it is foreseen to enhance the prototype so that it can be released in a first version.

With another focus on electrical vehicles and charging stations, battery data from such vehicles is used to predict charging demand forecasts based on the current state of charge. This demand forecast is used amongst other things for testing and analyzing a useful energy management system for electric charging stations. Depending on the implementation, there are varying billing procedures and possible special tariffs for the end user, due to optimized utilization with reduced network load. The practical implementation of the management system is to be considered theoretically by simulating different network states and loads of charging operations. In the same way, the forecasting of charging operations plays an important role in the charging and discharging cycles of the district storage. These simulations can be supplemented and substantiated by real measurements at a corresponding market ramp-up.

All involved actions will be monitored and documented, involving the successes as well as the emerging problems and failures that might come up. This monitoring should end up in a general strategy on how future projects on sustainable mobility should be managed and realised. Furthermore this strategy should take into account what risks and challenges can emerge in similar projects.

This project has received funding from the European Union’s Horizon 2020 research and innovation programme under Grant Agreement N°774477